PROJECT 17: Design and Analysis of NOR Gate by using Cadence Virtuoso

A Comprehensive Study of Analog Circuits

By: Priya Chaudhary, Astitva Johri and

Bhavya Solanki

Chapters:

List of Figures……..…… 3

1. Introduction …….. 4
2. Brief Description…… 5
3. Circuit Design…… 6-7
   3.1 Schematic Design……... 6
   3.2 Layout Design…… 6
   3.3 Simulation....…….. 6
   3.4 Transient Analysis …… 6
4. Simulation Results…….. 8
5. Advantages and Disadvantages…….. 9
   5.1 Advantages…… 9
   5.2 Disadvantages…… 9
6. Conclusion…….. 10
7. Frequently Asked Questions (FAQs)…….. 11

LIST OF FIGURES

Figure 3.1 Symbol of NOR Gate…....…….… 7

Figure 3.2 Circuit of NOR Gate…….…….… 7

Figure 4.1 Simulation Results of NOR Gate……... 8

1. INTRODUCTION

Digital logic design forms the backbone of modern electronics, with logic gates being the fundamental building blocks. Among these, the NOR gate holds a significant position due to its ability to function as a universal gate. A NOR gate is a combination of an OR gate followed by a NOT gate, producing an output of logical LOW (0) when any of its inputs are logical HIGH (1). Its unique property allows it to replicate any other logic gate, making it indispensable in circuit design and digital computation.

This document delves into the design and analysis of a NOR gate using Cadence Virtuoso, a powerful tool in the realm of electronic design automation (EDA). Cadence Virtuoso provides a platform for integrated circuit (IC) design, enabling designers to create schematics, layouts, and perform simulations. Through this documentation, readers will gain a comprehensive understanding of NOR gate design principles, layout considerations, and performance evaluations using state-of-theart tools and methodologies. Whether you are a student, researcher, or industry professional, this guide offers valuable insights into the practical aspects of digital logic design.

2. BRIEF DESCRIPTION

The NOR gate is a digital logic gate that outputs a logical LOW (0) when at least one of its inputs is HIGH (1). It combines the functionalities of an OR gate followed by a NOT gate, making it a universal gate capable of implementing any logical function.

In CMOS technology, the NOR gate is designed using both PMOS and NMOS transistors. The key design principle involves placing the PMOS transistors in parallel and the NMOS transistors in series. This arrangement ensures that the circuit outputs a logical HIGH only when all inputs are LOW, adhering to the NOR gate's truth table.

The NOR gate's role as a fundamental building block makes it critical in both combinational and sequential circuits. Its compact design and minimal power consumption are essential for modern digital systems, including processors, memory units, and communication devices. By leveraging the capabilities of Cadence Virtuoso, designers can achieve high precision in the design, simulation, and optimization of NOR gates, ensuring robust and reliable operation in practical applications.

3. CIRCUIT DESIGN

3.1 Schematic Design

Design the NOR gate by:

- Placing PMOS transistors in parallel and NMOS transistors in series.
- Connecting PMOS sources to VDD and NMOS sources to GND.
- Tying gates to inputs (A, B) and drains to the output (Y).
- Labeling all nodes appropriately.

3.2 Layout Design

- Place and align PMOS and NMOS transistors in the layout editor.
- Route signals and power using metal layers.
- Perform Design Rule Check (DRC) and Layout vs. Schematic (LVS) checks to ensure correctness.

3.3 Simulation

- Apply test signals (A, B) using voltage sources.
- Simulate transient response to verify logic levels for all input combinations.

3.4 Transient Analysis

- Analyze output switching behavior, propagation delay, and stability.
- Measure rise time, fall time, and noise margins for robust operation.

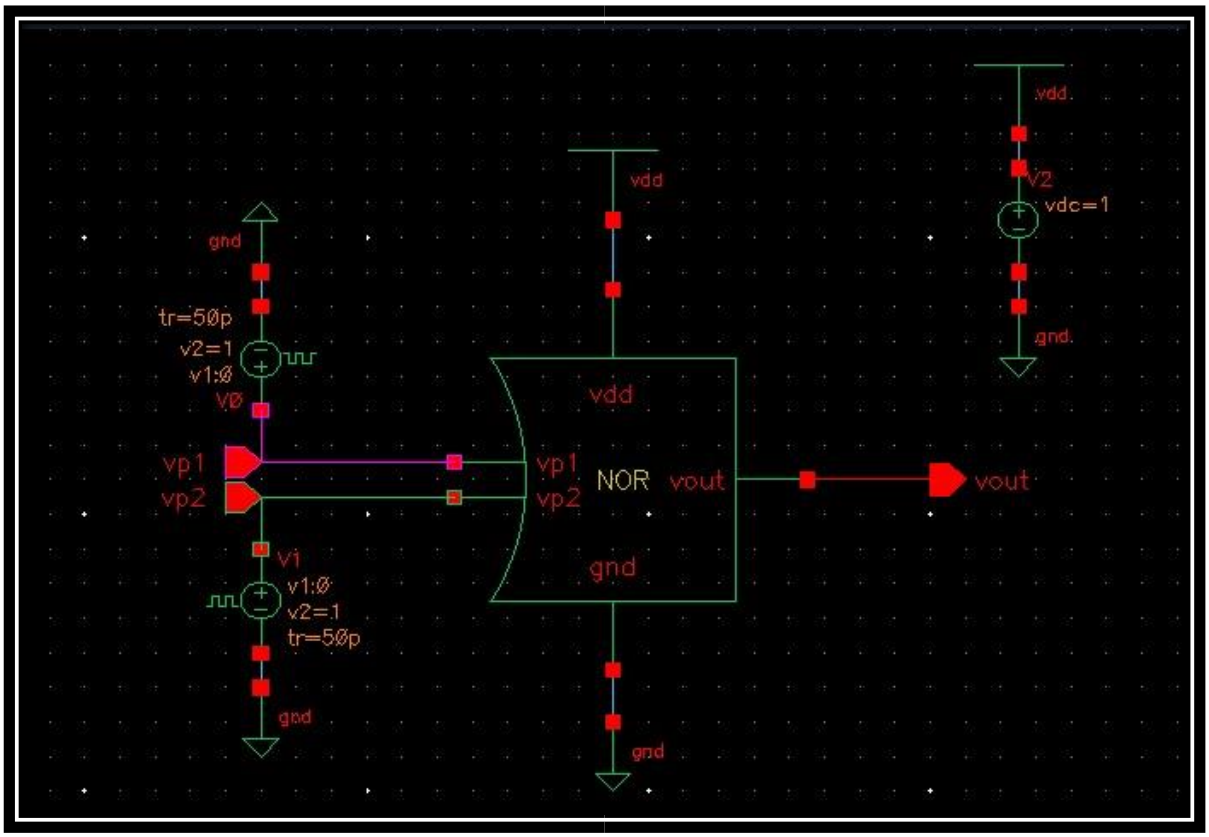

Figure 3.1 Symbol of NOR Gate

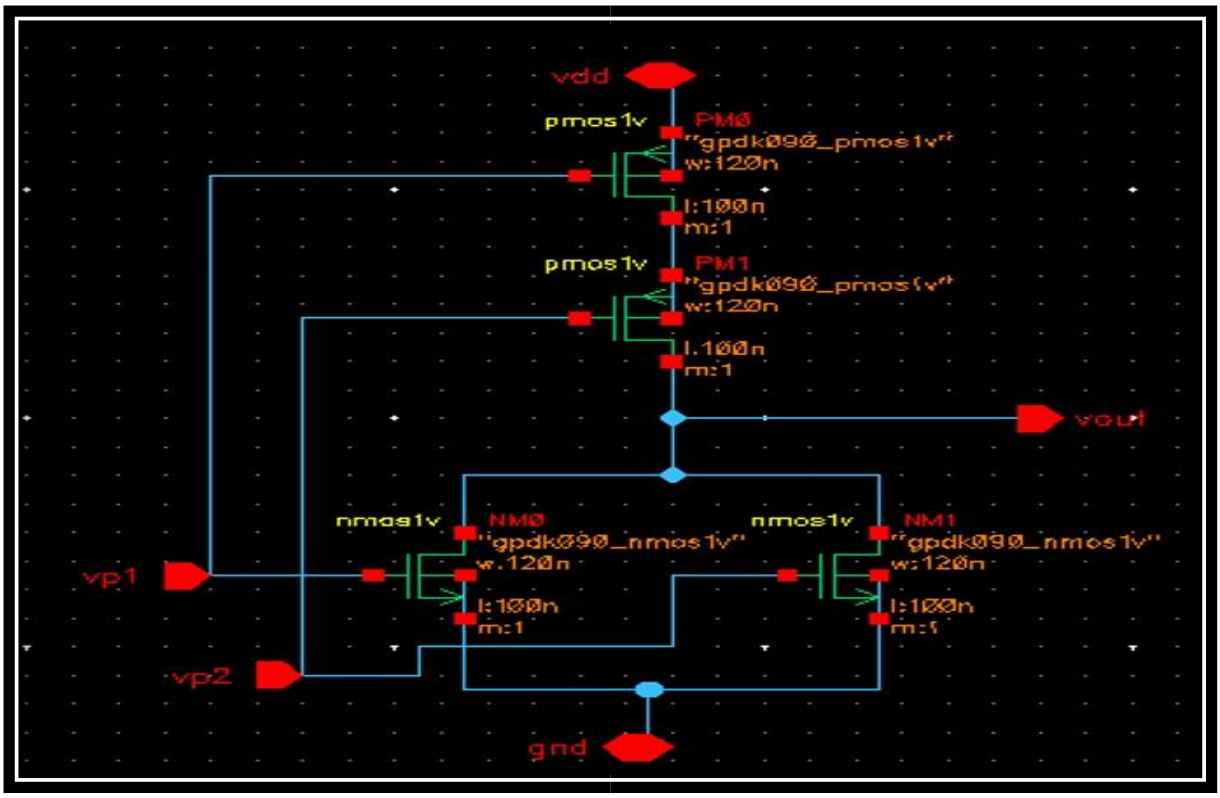

Figure 3.2 Circuit of NOR Gate

4. SIMULATION RESULTS

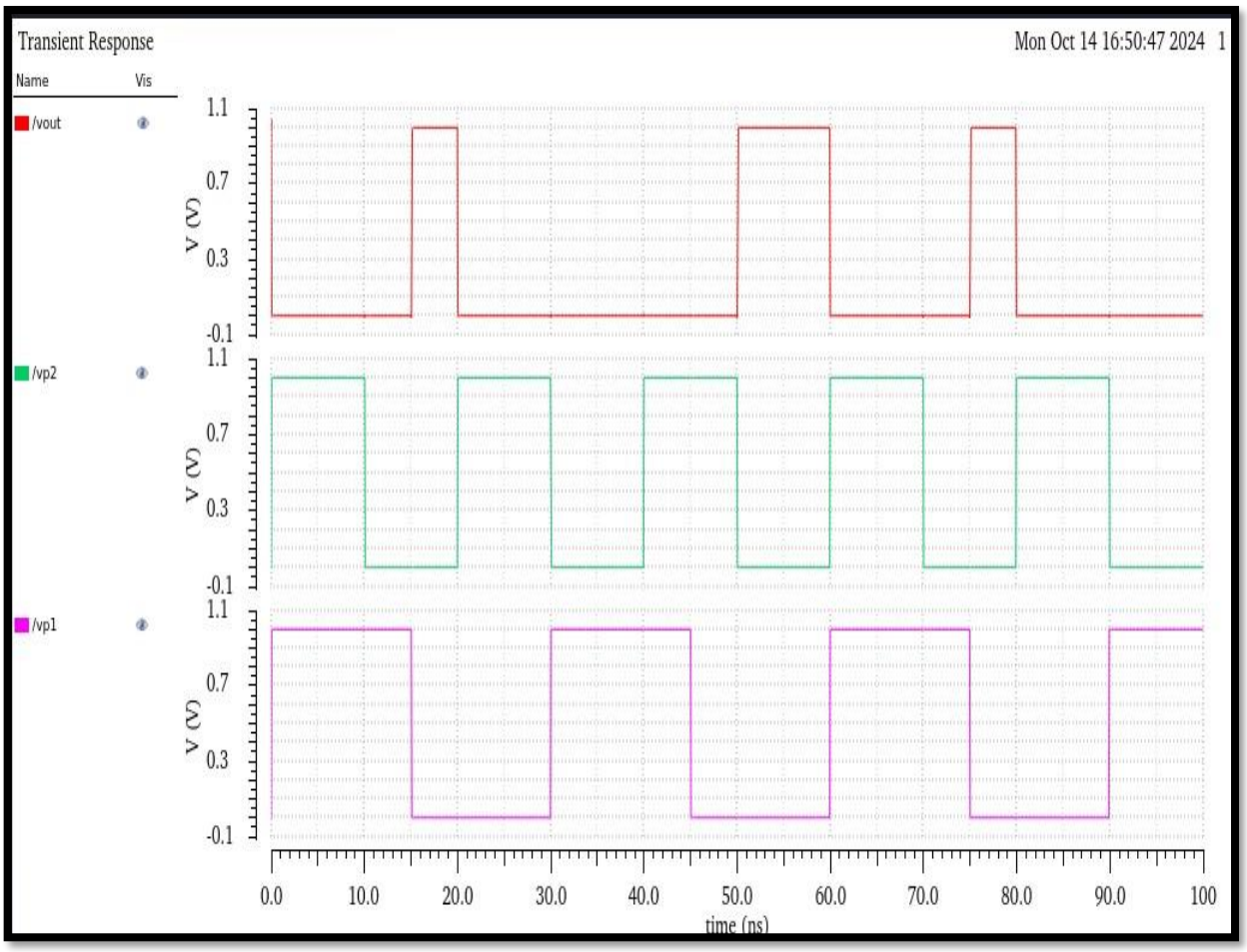

Figure 4.1: Simulation Results of NOR Gate

5. ADVANTAGES AND DISADVANTAGES

5.1 Advantages:-

1. **High Accuracy**: Ensures precise simulation results that align closely with real-world scenarios.
2. **Integration**: Facilitates seamless transition between schematic and layout design.
3. **Advanced Tools**: Offers powerful analysis tools for evaluating circuit performance.
4. **User-Friendly**: Provides an intuitive interface, making design and debugging efficient

5.2 Disadvantages:-

1. **Cost:** High licensing fees make it less accessible for smaller teams or individual users.
2. **Learning Curve:** Requires significant effort to master, particularly for beginners.
3. **Resource Intensive:** Demands high computational power for largescale designs.

6. CONCLUSION

The design and analysis of a NOR gate using Cadence Virtuoso highlight the intricacies and challenges involved in modern CMOS circuit design. By following the steps outlined in this document, designers can gain hands-on experience with creating and analyzing digital circuits with high accuracy. The use of Cadence Virtuoso enables seamless integration between schematic and layout design, offering a reliable environment for simulation and performance evaluation.

Through the detailed exploration of NOR gate design, we observe the importance of understanding both theoretical principles and practical implementation aspects. The combination of NMOS and PMOS transistors in the NOR gate ensures robust operation, minimal power dissipation, and adherence to the desired logical functionality. Additionally, parasitic extraction and simulation allow for a deeper understanding of how realworld factors influence circuit behavior.

In conclusion, this documentation serves as a foundational guide for students and professionals looking to master the design and analysis of logic gates using advanced EDA tools. With continuous practice and exploration, readers can extend these concepts to design complex digital systems, contributing to innovations in the field of electronics and integrated circuits.

7. FREQUENTLY ASKED QUESTIONS (FAQs)

Q1. What is the significance of using a NOR gate?

Answer: The NOR gate is a universal gate and can be used to implement any logical function. It is widely used in digital circuits and systems.

Q2. Why are PMOS transistors placed in parallel and NMOS transistors in series?

Answer: This configuration ensures that the NOR gate outputs a logical LOW when any input is HIGH, adhering to the NOR logic truth table.

Q3. What is the importance of parasitic extraction (PEX)?

Answer: PEX helps analyze the effects of parasitic capacitance and resistance in the layout, ensuring the design performs as expected in realworld scenarios.

Q4. How do I troubleshoot errors in LVS or DRC?

Answer: Cross-check the connections and placement in the layout. Ensure all layers and dimensions meet the process design rules and that the schematic matches the layout.

Q5. Can I use Cadence Virtuoso for other logic gates?

Answer: Yes, Cadence Virtuoso can be used to design and analyze any digital or analog circuit, including other logic gates like AND, OR, XOR, etc.